IMPEDANCE (Z)			
Frequency	25 MHz	100 MHz	300 MHz
Nominal (REF)	72 Ω	160 Ω	330 Ω
Minimum	- Ω	128 Ω	- Ω

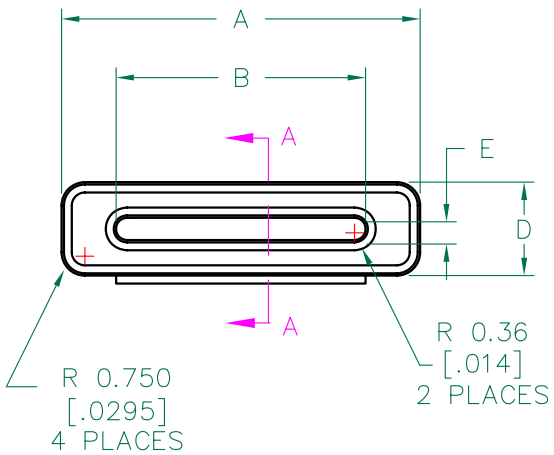

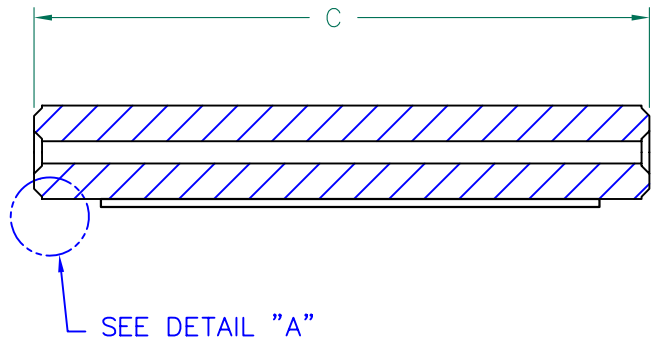

Z vs. FREQUENCY
(REF. ONLY)

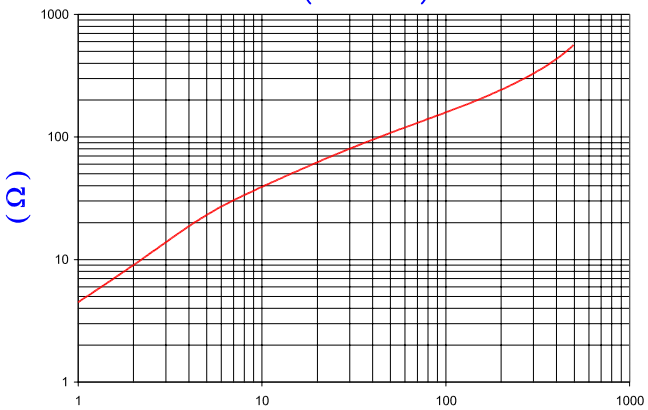

AGILENT E4991A Impedance/Material Analyzer
HP 16092A Test FIxture, REF # 3671

UNCONTROLLED DOCUMENT

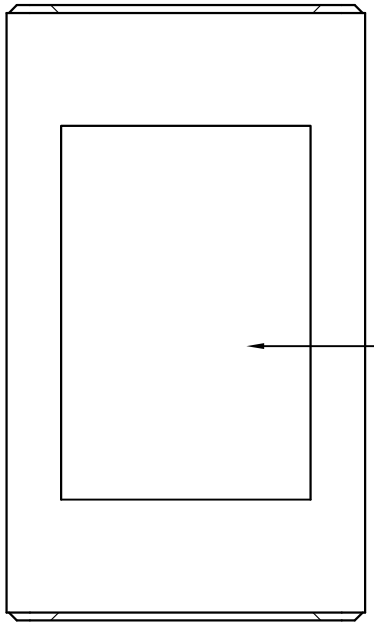

3M F-9473PC
OR ENGINEER
APPROVED
ALTERNATE

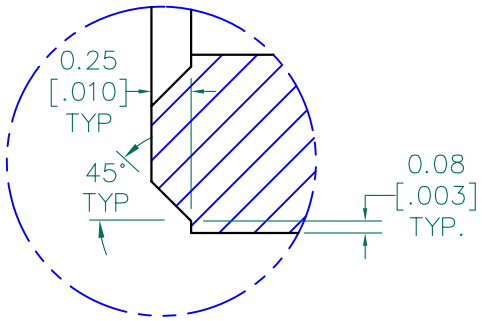

DETAIL "A"
CHAMFER
SCALE=20:1

FERRITE CORE DIMENSIONS (SPEC):

A	11.5 [.453]	± 0.25	[.010]
B	8.00 [.315]	± 0.20	[.008]
C	20.00 [.787]	± 0.30	[.012]
D	3.00 [.118]	± 0.20	[.008]
E	0.70 [.028]	± 0.15	[.006]

WEIGHT/1000 2.75 kgs [6.07 Lbs]

SCALE DRAWING 1:1

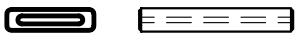

28R0453-30T

DIMENSIONS ARE IN mm[INCHES].

REV	DESCRIPTION	DATE	INT
B	REMOVE LINER TAB	12/03/09	Jcai
A	ORIGINAL DRAFT	4/22/09	JRK

This print is the property of Laird Tech. and is loaned in confidence subject to return upon request and with the understanding that no copies shall be made without the written consent of Laird Tech. All rights to design or invention are reserved.

Laird TECHNOLOGIES®

PROJECT/PART NUMBER:	REV	PART TYPE:	DRAWN BY:
28R0453-30T	B	CNZ RIBBON CORE	JRK

DATE:	SCALE:	MATERIAL:
4/22/09	4 : 1	FERRITE

CAD #	TOOL #
28R0453-30T-B	R0453