CASE FINISH	CURRENT (AMPS)	WORKING VOLTAGE				MAXIMUM DC RESISTANCE (OHMS)	MAXIMUM VOLTAGE DROP		MINIMUM CAPACITANCE (uF)	MIN. INSERTION LOSS PER MIL-STD-220, FULL LOAD, +25°C												
		-55°C TO +85°C		-55°C TO +125°C			DC	AC		14 KHz	30 KHz	50 KHz	75 KHz	100 KHz	150 KHz	300 KHz	500 KHz	1 MHz	10 MHz	100 MHz	1 GHz	10 GHz
		AC	DC	AC	DC																	
SOLDER	0.5	--	150	--	100	0.6	--	--	--	--	6	--	--	39	--	68	--	80	80	--	80	--

PART MARKING:
SCI
9001-100-1010
DATE CODE

PACKAGE MARKING:

STANDARD

MARKING NOTES:

N/A

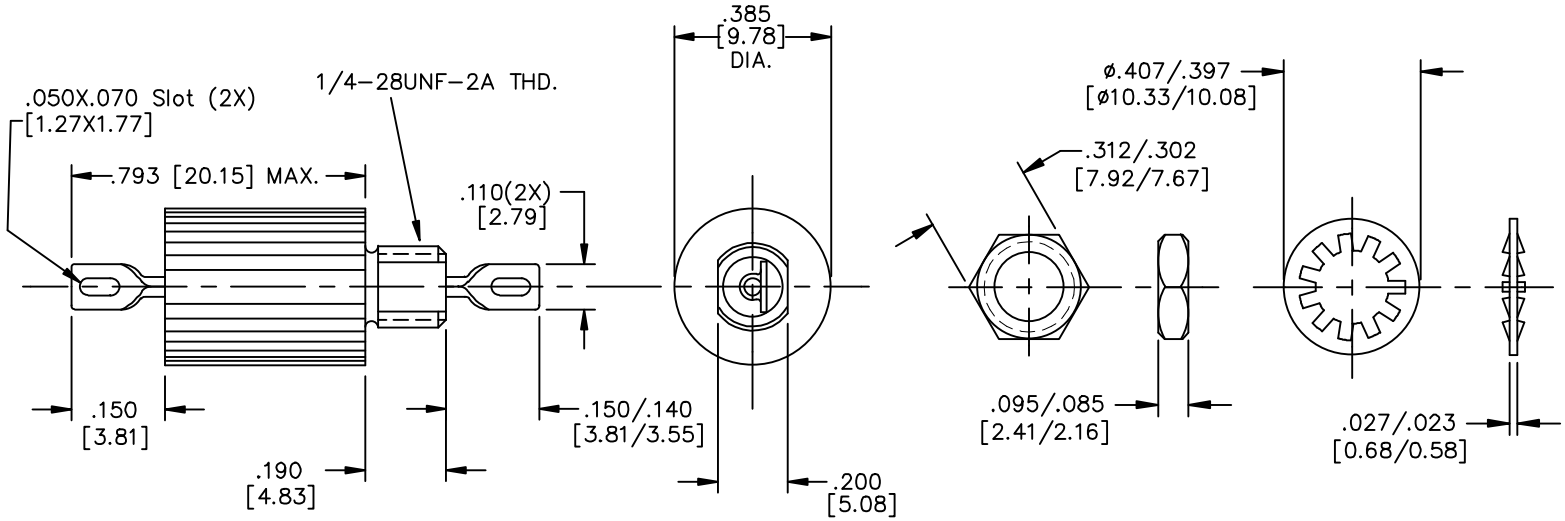

SCHEMATIC

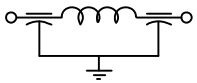

MTG. HARDWARE

NOTES:
1) MOUNTING TORQUE NOT TO EXCEED 7in-lbs.

05	REV. NO.	UNLESS OTHERWISE SPECIFIED DIMENSIONS ARE IN INCHES. [MILLIMETERS] DO NOT SCALE.	TOLERANCES UNLESS OTHERWISE SPECIFIED Fractions ± Dec. .xx ± Dec. .xxx ± .010 Angles ±0° 30′	SPECTRUM CONTROL INC.	ERIE, FAIRVIEW PENNSYLVANIA
CN 183715	CHANGE NOTICE		CODE IDENT. NO. OLSP2	Dwn. MAYNARD Ckd. 3/23/98 Sheet 1 of 1	Description Low Pass EMI Filter 9001-100-1010

Quality Products From The Specialists In Electro-Magnetic Compatibility